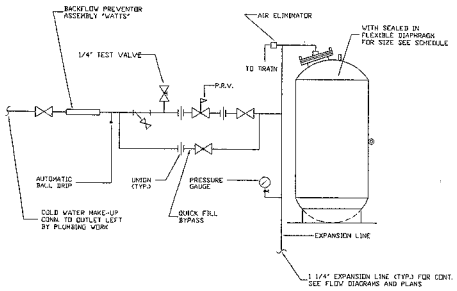

PRE-PRESSURIZED EXPANSION TANK

NOT TO SCALE

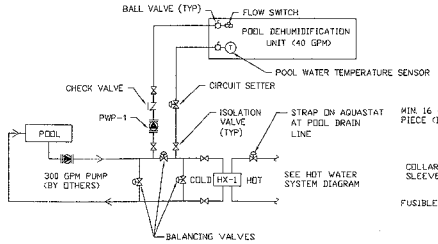

POOL HEATING DIAGRAM

N.T.S.

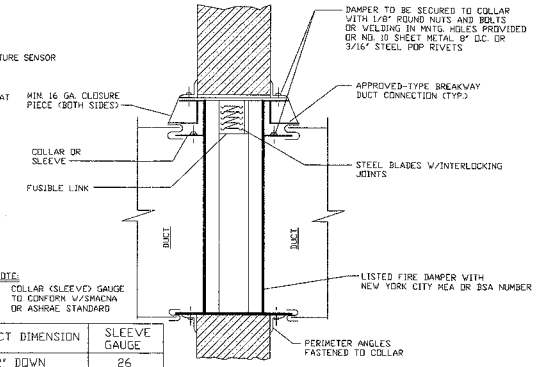

NOTE:
COLLAR (SLEEVE) GAUGE TO CONFORM W/SMACNA OR ASHRAE STANDARD

DUCT DIMENSION	SLEEVE GAUGE
12" DOWN	26
13" - 30"	24
31" - 54"	22
55" - 84"	20
85" UP	18

FIRE DAMPER DETAIL

N.T.S.

NOTE;
1. PROVIDE DUCT MOUNTED ACCESS DOOR FOR ACCESS TO FUSIBLE LINK

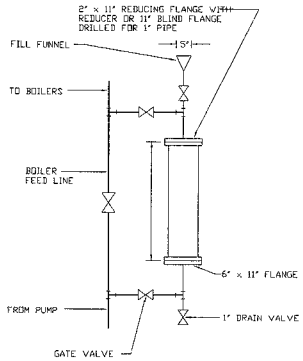

SHOT TYPE CHEMICAL FEEDER

NOT TO SCALE

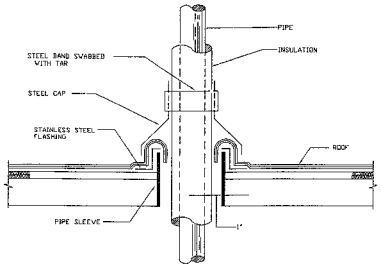

DETAIL OF INSULATED PIPE THRU ROOF

NOT TO SCALE

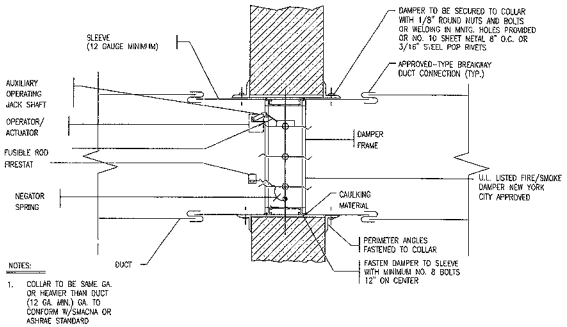

NOTES:
1. COLLAR TO BE SAME GA. OR HEAVIER THAN DUCT (12 GA. MIN.) GA. TO CONFORM W/SMACNA OR ASHRAE STANDARD

COMBINATION FIRE/SMOKE DAMPER DETAIL

N.T.S.

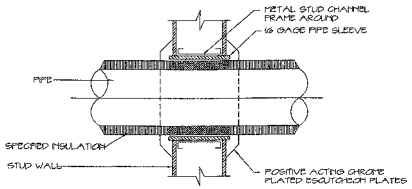

NOTE: CAST ESCUTCHEON PLATES FOR CONCEALED PIPES

PIPE THRU STUD WALL DETAIL

N.T.S.

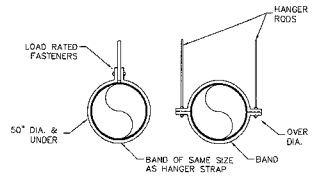

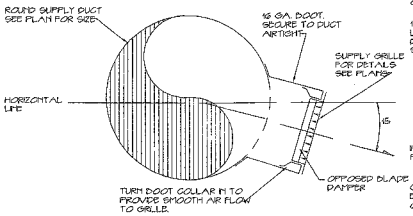

DUCT MOUNTED SUPPLY GRILL DETAIL

N.T.S.

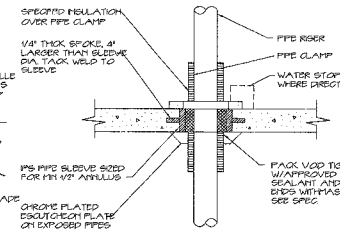

PIPE THRU FLOOR SLAB DETAIL

N.T.S.

HANGER STRAPS OR RODS			
MAX DUCT DIA. (IN.)	QUANTITY/SIZE (IN.)	MAX LOAD (LBS.)	MAX SPACING (FT.)
26	ONE 1 X 22 GA STRAP	260	12
36	ONE 1 X 18 GA STRAP	420	12
50	ONE 1 X 16 GA STRAP	700	12
60	TWO 3/8 DIA RODS	1,320	12
84	TWO 1/2 DIA. RODS	2,500	12

ROUND DUCT HANGING DETAIL

N.T.S.

VENTILATING NOTES

1. UPON COMPLETION OF THE VENTILATING SYSTEM, A TEST SHALL BE CONDUCTED IN THE PRESENCE AND UNDER THE DIRECTION OF A LICENSED PROFESSIONAL ENGINEER OR REGISTERED ARCHITECT QUALIFIED TO CONDUCT SUCH TESTS, OR OTHER PERSON HAVING NOT LESS THAN FIVE (5) YEARS EXPERIENCE SUPERVISING THE INSTALLATION OF VENTILATING SYSTEMS AND QUALIFIED TO CONDUCT SUCH TESTS. THE TEST SHALL SHOW COMPLIANCE WITH THE CODE REQUIREMENTS FOR VENTILATION AND THE PROPER FUNCTIONING OF ALL OPERATING DEVICES, BEFORE THE SYSTEM IS APPROVED.
2. THE LICENSED PROFESSIONAL ENGINEER OR REGISTERED ARCHITECT OR OTHER QUALIFIED PERSON WHO CONDUCTS THE TEST SHALL FILE A CERTIFICATE AS TO WHETHER THE TEST SHOWS THAT THE RATE OF AIR SUPPLY AND EXHAUST COMPLIES WITH REQUIREMENTS OF THE CODE PERTAINING TO VENTILATION.
3. A STATEMENT SHALL BE FILED BY THE OWNER THAT THE SYSTEM OF VENTILATION WILL BE KEPT IN CONTINUOUS OPERATION AT ALL TIMES DURING THE NORMAL OCCUPANCY OF THE STRUCTURE AS PROVIDED IN THE APPLICABLE SECTIONS OF THE CODE.
4. PROVIDE A FIRE DAMPER IN DUCTS WHERE DUCTS ENTER OR LEAVE VENTILATING SHAFTS.
5. ALL FIRE DAMPERS SHALL BE OF A TYPE APPROVED BY THE NATIONAL BOARD OF FIRE UNDERWRITERS.

N.Y.C. VENTILATION INDEX					
AREA SERVED	MINIMUM CODE AIR REQUIREMENTS (CFM/FT²)		ACTUAL MINIMUM CONDITIONED AIR QUANTITIES (CFM/FT²)		ACTUAL MINIMUM OUTSIDE AIR QUANTITIES (CFM/FT²)
	SUPPLY	EXHAUST	SUPPLY	RECIRC &/OR EXHAUST	
PERIMETER ROOMS	.4		1.3		.13
INTERIOR ROOMS	.4		1.3		.13

NOTES
CALCULATED VENTILATION INDEX MEETS REQUIREMENTS FOR BOTH INTERIOR AND PERIMETER ROOMS.
EXAMPLE CALCULATION: ROOM AREA = 100 FT² ;ROOM VOLUME = 800 FT³
NO. OF PEOPLE = 1
INDEX = 1800
MINIMUM CODE REQUIREMENTS
VENTILATION (FRESH) AIR: SUPPLY = .4 CFM/FT² EXHAUST = .4 CFM/FT²
CONDITIONED AIR (SEE VENTILATION .4 TABLE 12-2) = TOTAL MINIMUM SUPPLY & EXHAUST = 1/3 CFM/FT² EACH. TOTAL MINIMUM FRESH AIR = 33% OF INDEX REQUIREMENT = .4 x .33 = .13 CFM/FT²
ACTUAL QUANTITIES
CONDITIONED SUPPLY: SEE TABULATION ABOVE

KEY NOTES:

GENERAL NOTES:

1. CONTRACTOR SHALL REFER TO EXISTING CONDITION (BASE BUILDING) DRAWINGS FOR LOCATION OF EXISTING UTILITY ROOMS, PIPING, CONDUIT, AND FOR ADDITIONAL INFORMATION.

KEY PLAN:

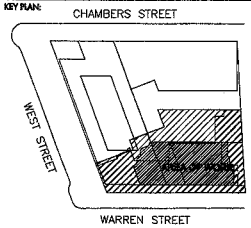

MANHATTAN YOUTH
RECREATION AND RESOURCES

200 CHAMBERS ST
P_212.766.1104

MANCINI DUFFY
ARCHITECTURE•DESIGN

Halsey, McCormack & Helmer, Inc. Architects
39 West 13th Street, New York, NY 10011
Tel: 212.938.1260 Fax: 212.938.1267
E-Mail: mancinidf@manciniduffy.com

All drawings and written material appearing herein constitute original and unpublished work of the architect and may not be duplicated, used or disclosed without written consent of the architect.

M-E Engineers
417 5TH AVENUE
NEW YORK, NEW YORK 10016
PH: (212) 447-6770 FAX: (212) 447-6615

ISSUES / REVISIONS:

NO.	DATE	ISSUE / REVISION	BY	CK
1	12.18.05	ISSUED FOR CLIENT REVIEW	GO	–
2	12.23.05	ISSUED FOR PRELIMINARY PRICING	GO	LJK
3	02.22.06	ISSUED FOR PRELIMINARY PRICING	GO	LJK
4	07.07.06	ISSUED FOR BID		
5	05.11.07	ISSUED FOR BID/CONSTRUCTION		

PLAN NORTH:

DRAWING SCALE: AS NOTED

PROJECT NUMBER:
02-2167-0100

SEAL:

MAY 18 2007

BP MECHANICAL CORP

DRAWING TITLE:
MECHANICAL DETAILS AND DUCT AND LOUVER SUMMAR

DRAWING NUMBER:
M-109